wDALI Controls

Datasheet

DALI RF Remote Control

Wireless control of DALI systems

Art.Nr. 86459587-TR (Transceiver)
Art. Nr. 86459534-W (Remote white)
Art. Nr. 86459534-B (Remote black)
Art.Nr. 89453848 (MC)
Art.Nr. 86459541-W (Switch white)
Art.Nr. 86459541-B (Switch black)

combo transmitter/receiver:
Art. Nr. 86459534-W+T (Remote white +Tr.)
Art. Nr. 86459534-B+T (Remote black +Tr.)
Art.Nr. 89453848+T (MC +Tr.)
Art.Nr. 86459541-W+T (Switch white +Tr.)
Art.Nr. 86459541-B+T (Switch black +Tr.)

wDALI Controls Wireless DALI Controls

Overview

- Wireless control of a DALI-line
- A wDALI control consist of at least two components – the freely placeable user interface (input device) and a transceiver, which has to be connected to the DALI signal line
- Available input devices: Remote (12 buttons), Switch (4 Buttons) and MC, a pushbutton coupler with 4 potential-free inputs (pushbuttons only)
- Up to 4 effective ranges, switching mode and DALI-command can be assigned to each pushbutton.
- Factory default setting offers basic control functions
- Individual addresses (0-63), group addresses (0-15) or broadcast can be set as effective range.
- Various switching modes (short, long press; toggle; stairways function etc.) can be assigned to each pushbutton.
- DALI DT8 support for adjustable white luminaires
- Configurable power up function
- Memory function for brightness
- Simple installation and configuration with the DALI-Cockpit software tool
- Multiple input devices can be paired with the same transceiver (FW-Version 2.0 and higher), each paired device has the same function.
- A input device can be paired with several transceivers in order to control multiple DALI-lines
- Multiple wDALI-transceivers can be used on the same DALI signal line.
- The transmitter part (input device can be placed anywhere in the radio receiver range.
- The transceiver must not be connected to the mains. It is supplied directly via the DALI signal line.

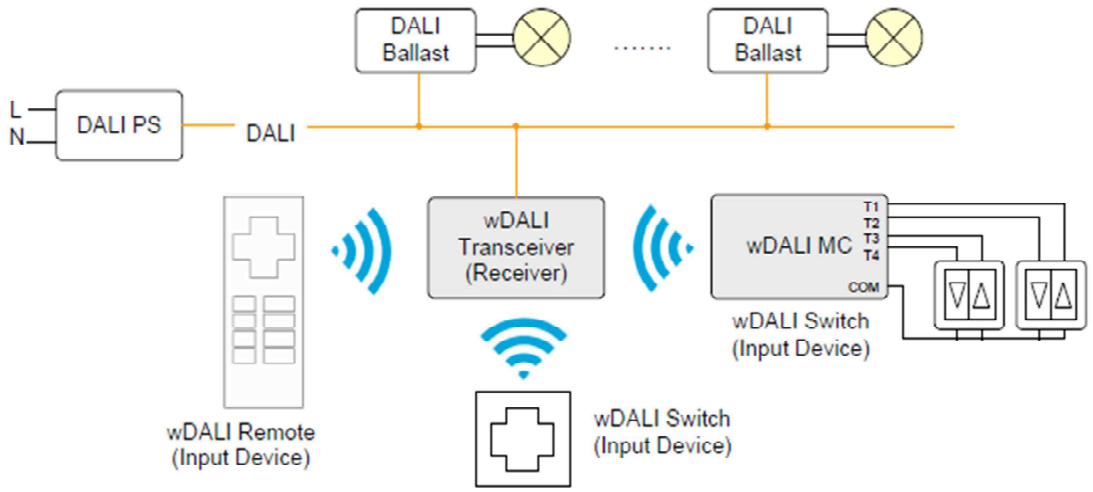

typical installation (several input devices, one transceiver)

© 2017/04/28, Lunatone Industrielle Elektronik GmbH

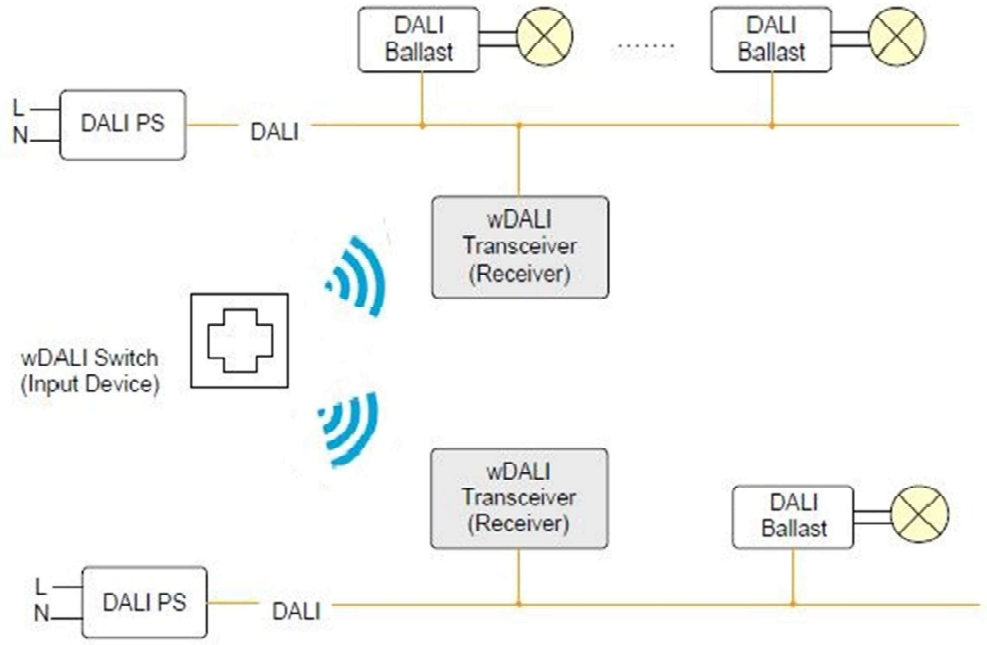

typical installaiton (one input device, simultanous conrol of multiple DALI-lines)

Specification, Characteristics

type	**wDALI Transceiver**
article number	86459587-TR
electrical data:	
supply	via DALI signal-line
typ.current consumption	3.8mA
output	DALI
function after power return	programmable
frequency range	2,4 Ghz
receiving range	up to 300m (outdoors)
technical data:	
dimensions	59mmx33mmx15mm
housing/mounting	back box
connecting wire cross section	0.5 to 1.5 mm^2
ambient temperature	-10°C...+50°C
protection class	IP20

© 2017/04/28, Lunatone Industrielle Elektronik GmbH

type	wDALI Switch Cross	wDALI Remote	wDALI MC
article number	86459541-W (white) 86459541-B (black)	86459534-W (white) 86459534-B (black)	89453848

electrical data:

supply	battery		
estimated battery lifetime	6 years		
output	2,4Ghz RF		
inputs	4 pushbuttons	12 pushbuttons	4 potential free inputs for pushbuttons

technical data:

dimensions	82mmx82mmx8,5mm	140mmx52mmx10mm	40mmx28mmx15mm
housing	wall mounting	-	back box
connecting wire cross section	-		0.5 to1.5 mm^2
ambient temperature	-10°C…+50°C		
protection class	IP20		

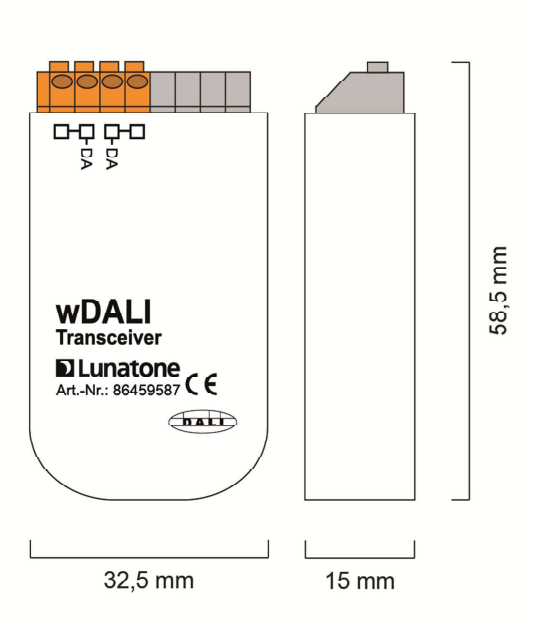

geometry transceiver (receiver)

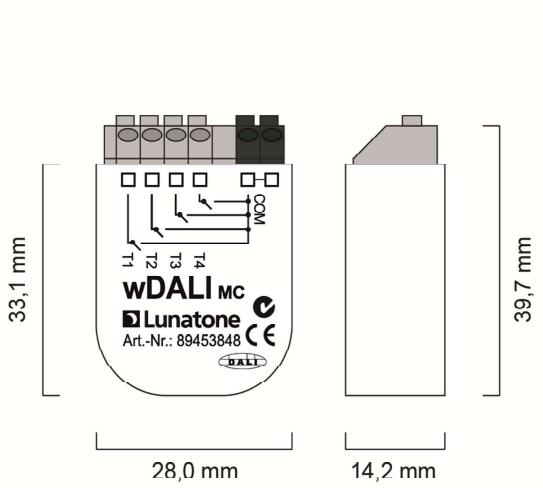

geometry MC (input device)

© 2017/04/28, Lunatone Industrielle Elektronik GmbH

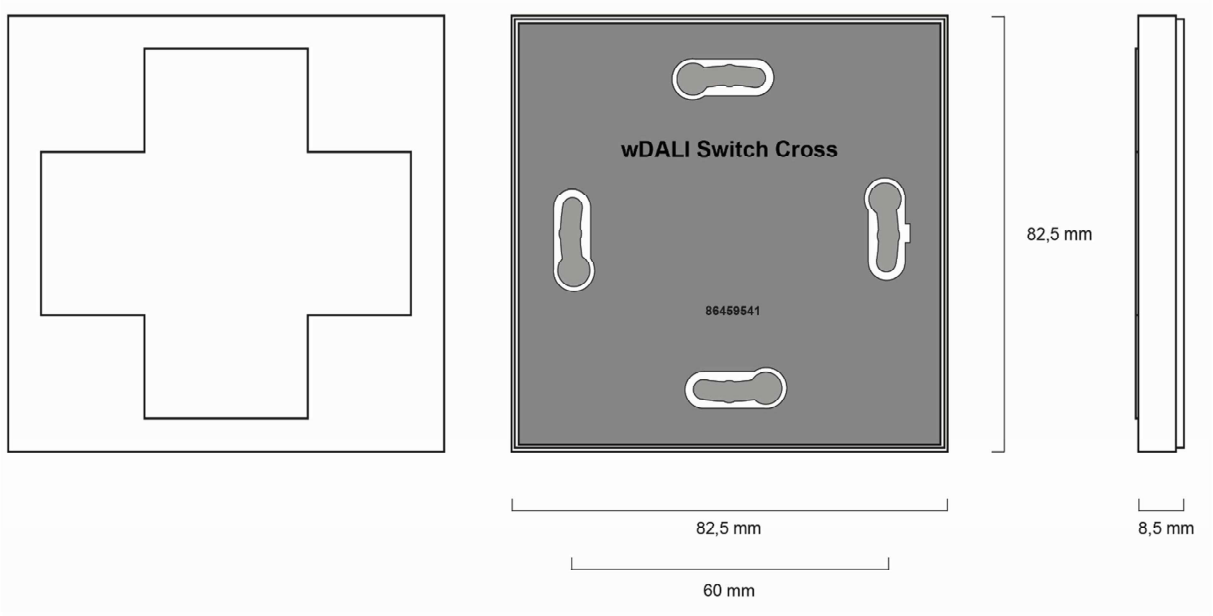

geometry switch (input device)

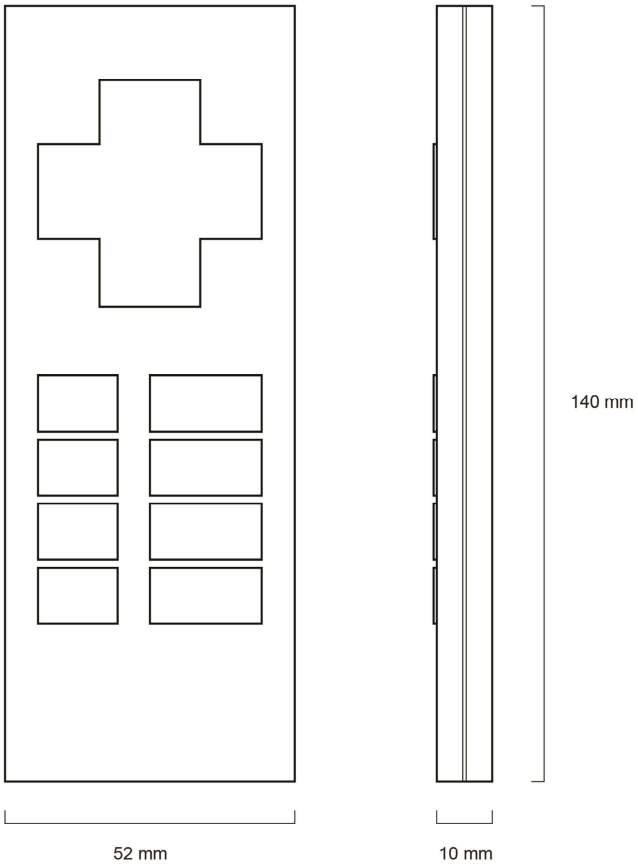

geometry remote (input device)

© 2017/04/28, Lunatone Industrielle Elektronik GmbH

Installation

- wDALI Transceiver is supplied by the DALI-line (typ. current consumption 3.8mA)
- the connection to the DALI-line is polarity free
- the DALI-input is protected against overvoltage (up to mains voltage)
- the wDALI transceiver is suitable for back box mounting
- input devices can be placed within the receiver range (dependent on structural conditions, outdoors up to 300m)

Function

- Simple addressing and configuration with the DALI Cockpit software tool
- Simple Pairing/Unpairing of additional input devices
- The function assigned to a button can be recalled by each of the paired input devices (Switch&MC: Button 1-4, Remote: Button 1-12)
- Factory setting (Preset1) can be restored at any time
- Preset 2 for tunable white mode can be configured quickly
- Individual configuration for each button
- Command selection from DALI command set, predefined and customized macros
- Predefined macros for dynamic and sequential recall of scenes, tunable white control and memory function
- Adjustable power up function (no change, Off, scene 0-15)
- Operating modes for interacting with a central control unit

Hint: only pushbuttons may be connected to the wDALI MC. Do not connect switches!

© 2017/04/28, Lunatone Industrielle Elektronik GmbH

Preset1: Switch&Dim (factory default)

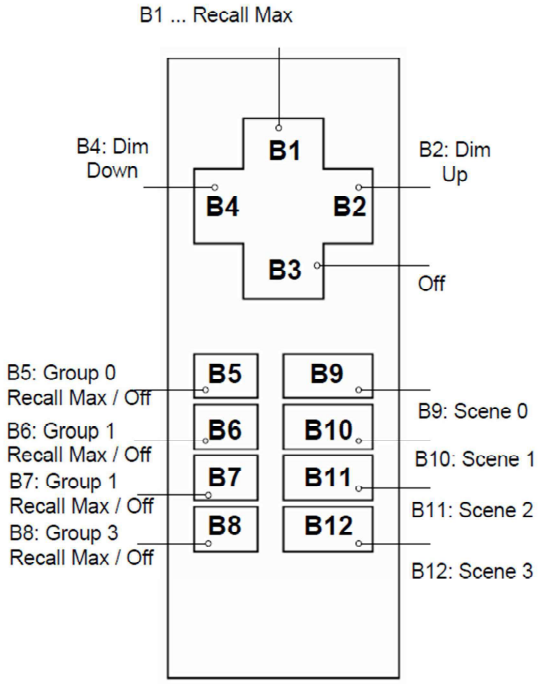

Preset2: switch, dim & tunable white

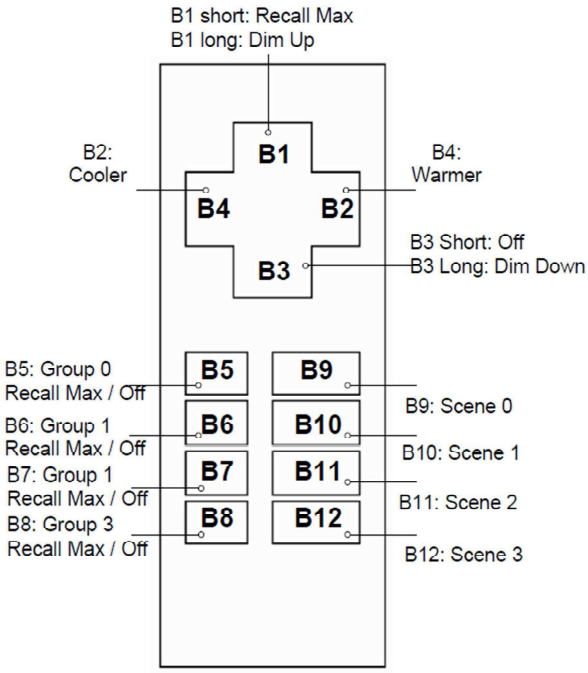

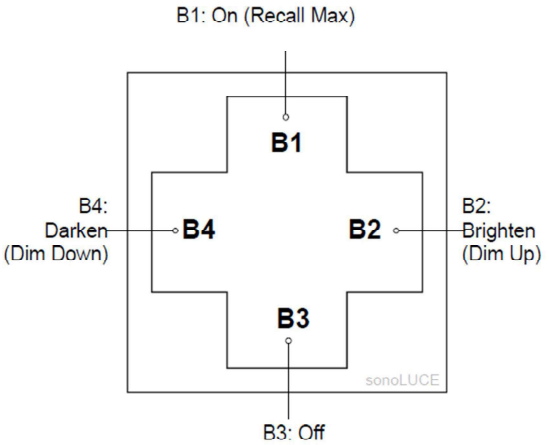

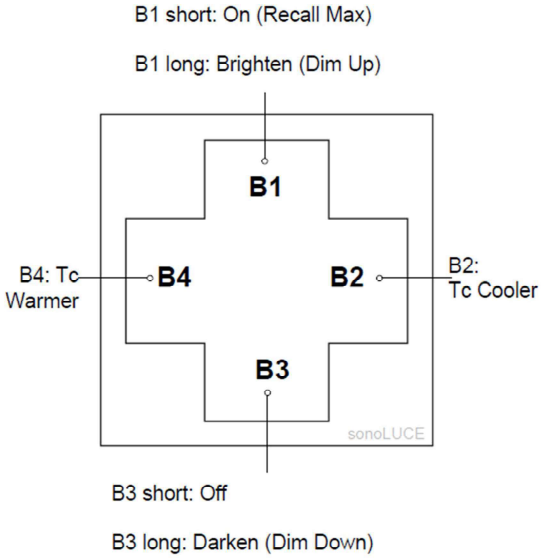

MC – input 1: Recall Max
MC – input 2: Dim Up
MC – input 3 : Off
MC – input 4: Dim Down

MC – input 1 short: Recall Max
MC – input 1 long: Dim Up
MC – input 2: Cooler
MC – input 3 short : Off
MC – input 3 long: Dim Down
MC – input 4: Warmer

© 2017/04/28, Lunatone Industrielle Elektronik GmbH

Pairing (supported by firmware 2.0 and higher) : Add/Remove input device, all paired input devices are shown in the DALI Cockpit

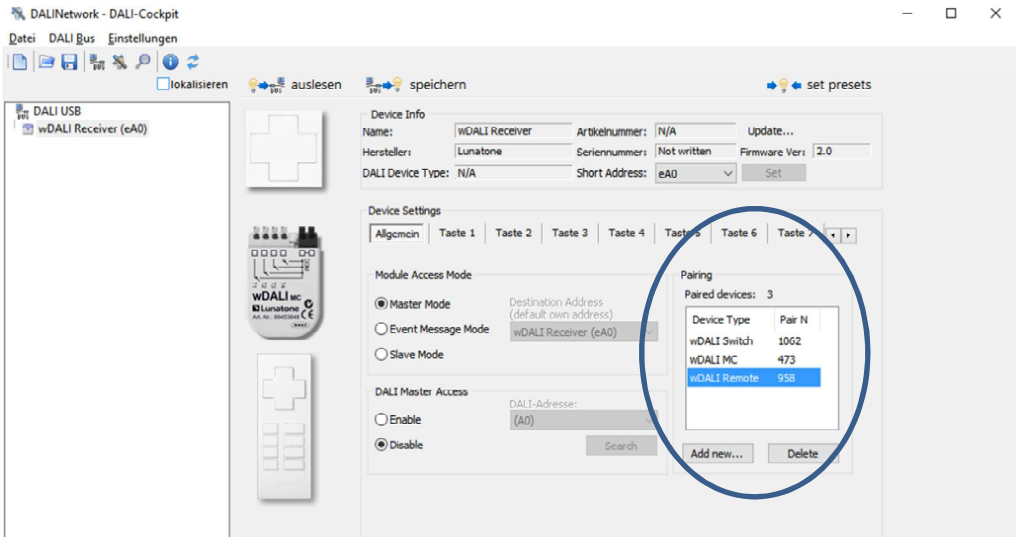

The pairing number of the input device can be found on the round sticker on the backside of the input device (e.g. see DALI Switch below):

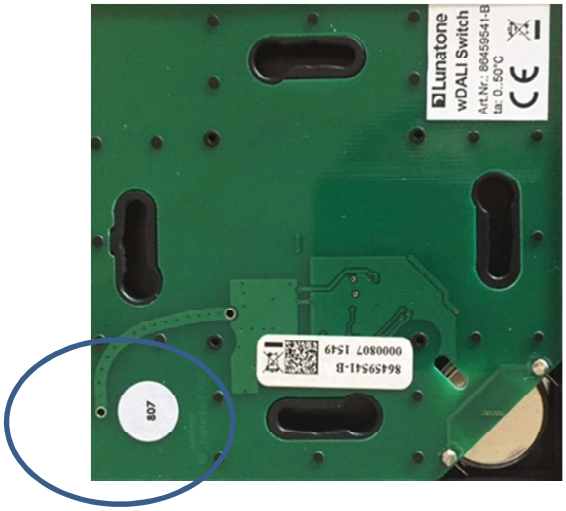

The active button is always shown on all paired input device types:

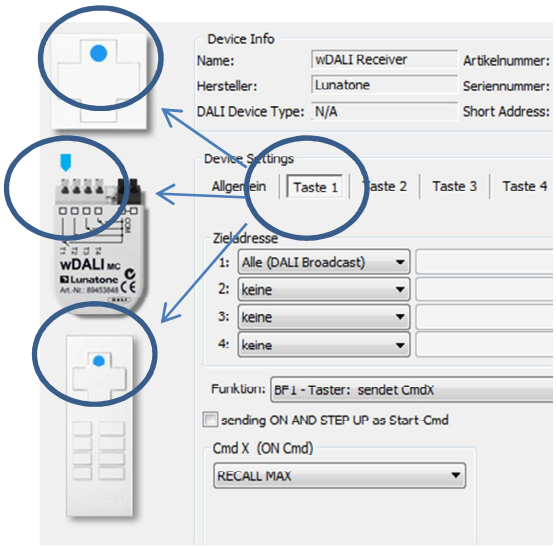

 © 2017/04/28, Lunatone Industrielle Elektronik GmbH

Settings for Switching function of a pushbutton:

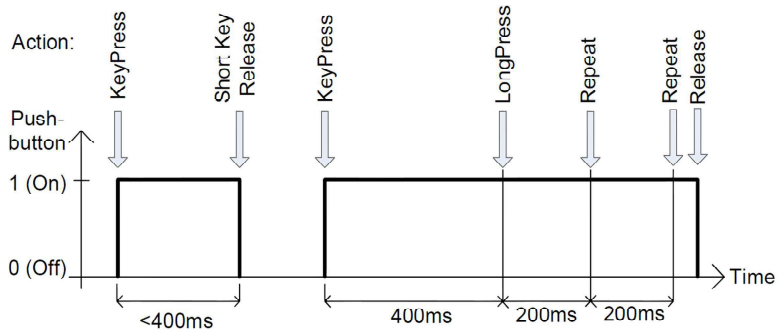

Definition:

Key	Duration	
Definition	**min**	**max**
short	40 ms	400 ms
long	>400 ms	

button-function	key press	release after short press	long press	repeat	remarks
0	-	-	-	-	-
1	CmdX	-	-	-	sends CmdX on key press
2	CmdX	-	CmdY	-	sends CmdX on key press sends CmdY after long press delay
3	CmdX	-	CmdY	CmdY	sends CmdX on key press sends CmdY with 200ms repetition after long press delay
4	CmdX / CmdY toggle	-	-	-	sends CmdX and CmdY alternating on key press
5	CmdX / CmdY toggle	-	-	-	CmdX/Y **depending on bus status**
6	-	CmdX / CmdY toggle	ON and STEPUP	UP / DOWN	CmdX/Y **depending on bus status**, UP/DOWN alternating, ON AND STEPUP, if bus state is OFF before UP
7	-	-	-	-	-
8	-	-	-	-	-
9	CmdX	-	-	-	Staircase control. CmdY is sent after a programmable delay.
10	-	CmdX	CmdY	CmdY	CmdX after short press, CmdY for repeat
11	CmdX	-	-	CmdY	CmdX with repeat; repeats CmdY without long press delay
12	CmdX	CmdY	-	CmdX	CmdX with repeat; if button is released within short press time, CmdY is finally sent

Hint: When using overlapping areas a correct evaluation of the state of the areas cannot be guaranteed

Hint: DALI commands are always sent to all effective ranges assigned to a key.

Settings for CmdX/CmdY

CmdX and CmdY represent DALI commands or sequences of DALI commands which are sent on the DALI-line after the corresponding switching action has occurred. CmdX and CmdY can be:

 © 2017/04/28, Lunatone Industrielle Elektronik GmbH

- DALI commands
- Predefined macros (command sequences)
- Custom macros

DALI-Commands:

CmdNr	Command name	function
-	DIRECT ARC POWER	Direct set of the light level in %
0	OFF	Off
1	UP	Dim up (using faderate)
2	DOWN	Dim down (using faderate)
3	STEP UP	Increases light level by one increment
4	STEP DOWN	Decreases light level by one increment
5	RECALL MAX	Recalls maximum value
6	RECALL MIN	Recalls minimum value
7	STEP DOWN AND OFF	Decreases light level by one increment, if light level is already at minimum switch off
8	ON AND STEP UP	Switch on light to minimum if it is off, otherwise increase level by one increment
10	GOTO LAST ACTIVE LEVEL (DALI 2)	Switch to last active level (supported by DALI2 compatible ballasts, firmware version 2.0 and higher)
16-31	GO TO SCENE	Recall scene 0-15

Macros:

MacroNr	Macro (required memory)	Function
M1	Go Home (2 Byte)	Light dims down to DAP 0 with predefined fade time, then fade time is set back to a programmable value
M2	Sequential Scenes (3Byte)	Selectable scenes (or OFF) will be sent sequentially with each button press
M3	Dynamic Scenes (33 Byte)	Dynamic sequence of up to 16 scenes, fadetimes and delays (0…254s) can be configured, stops with next button press
M4	DALI-Reset (1 Byte)	Sends DALI-Reset (address can be deleted optionally)
M5	User Defined Cmd-List (5 Byte je Befehl, 19 Befehle max.)	A user defined macro file can be loaded
M6	3x Cooler (DT8) (0 Byte)	Activates DT8 and sends STEP COOLER command 3x
M7	3x Warmer (DT8) (0 Byte)	Activates DT8 and sends STEP WARMER command 3x
M8	Memory Switch On (4 Byte)	MEMORYFUNCTION recalls last used level, only works in combination with Switch Off macro (firmware version 1.8 and higher)
M9	Memory Switch Off (3 Byte)	MEMORYFUNCTION Stores the actual value in the ballast and switches off (firmware version 1.8 and higher)
M10	Memory Dim Up (after Switch Off) (3 Byte)	MEMORYFUNCTION Macro for dimming up if Switch Off Macro has been used before (firmware version 1.8 and higher)

 © 2017/04/28, Lunatone Industrielle Elektronik GmbH

Hint: The available macro memory of 96 bytes per button (button 1-4) must not be exceeded. For button 5-8 and button 9-12 a total macro space of 192 bytes is available (the required memory for each macro is mentioned in the second column of the macrotable)

Memory Function

wDALI-Controls support different methods of memory function for brightness.

Method 1: Macro M8-M10, the actual level is stored as MAX-Level before the ballast is switched off. When switching on by using Recall Max the stored level (=last active level) is recalled. The old Max-value is restored finally.

Method 2: Support of DALI 2.0 command Nr. 10 - GOTO LAST ACTIVE LEVEL. Suitable only for Ballast, which already support this command (firmware 2.0 and higher)

Method 3: As alternative scenes can be used for storing the last level temporary. Before switching off the actual value has to be stored as scene value. Switching on to the last active level can then be realised with recalling the corresponding scene.

DALI-Cockpit

With the help of the DALI Cockpit the mentioned functions can be configured for each button separately.

In the settings for each button there are 2 parts: the effective range (destination address) and the function (button function and its configuration options)

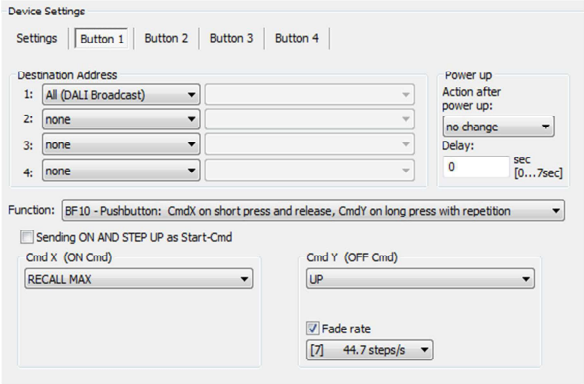

Operating Modes

Three operation modes are supported, one of them for direct control of DALI ballasts (master mode) and 2 others for operation in combination with a central controller (slave mode, event message mode).

<u>Master Mode (Default)</u>

In this operating mode the wDALI-device acts as DALI control device on the DALI-line and sends event based DALI-commands directly to the ballasts (as configured).

<u>Event Message Mode</u>

In this mode predefined proprietary commands are sent on the DALI-line on button press. They can be evaluated by a central controller. In this mode DALI-commands are not sent directly to the ballasts.

Hint: Any command (DALI or proprietary extension) can be generated in master mode using user defined command lists (macro M5). Hence a custom solution for event messaging can be realized.

 © 2017/04/28, Lunatone Industrielle Elektronik GmbH

Slave Mode

The slave mode is a passive operating mode. The wDALI Control does not send commands by its own, it only replies on requests.

The operating mode can be set in the DALI-Cockpit.

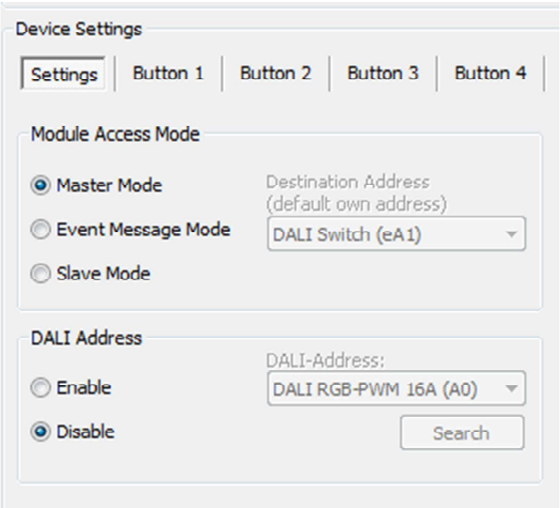

Purchase Information

Transceiver:
Art.Nr. 86459587-TR wDALI Transceiver, base unit – connected to the DALI-line, can be paired with several input devices

Input devices:
Art. Nr. 86459534-W Remote white, 12 buttons
Art. Nr. 86459534-B Remote black, 12 buttons
Art.Nr. 89453848 MC, 4 inputs
Art.Nr. 86459541-W Switch white, 4 buttons
Art.Nr. 86459541-B Switch black, 4 buttons

Combination (Transceiver and Input devices):
Art. Nr. 86459534-W+T Remote white+Trans.
Art. Nr. 86459534-B+T Remote black +Trans.
Art.Nr. 89453848+T MC+Transceiver
Art.Nr. 86459541-W+T Switch white+Trans.
Art.Nr. 86459541-B+T Switch black+Trans.

Additional Information and Equipment

DALI-Cockpit – free configuration tool from Lunatone for DALI systems
http://lunatone.at/en/downloads/Lunatone_DALI-Cockpit.zip

Lunatone DALI products
http://www.lunatone.at/en/

Lunatone datasheets and manuals
http://lunatone.at/en/downloads/

Contact

Technical Support: support@lunatone.com

Requests: sales@lunatone.com

www.lunatone.com

Disclaimer

Subject to change. Information provided without guarantee. The datasheet refers to the current delivery.

The compatibility with other devices must be tested in advance to the installation.

© 2017/04/28, Lunatone Industrielle Elektronik GmbH